Data Sheet
10/18-0.34-EN

Electro-Pneumatic Positioner TZIDC-220

for FOUNDATION Fieldbus,
flameproof enclosure

- **Low operating cost**
- **Compact design**
- **Well-proven technology and intelligence**
- **Robust and environmentally ruggedized**
- **Wide operating temperature range -40 ... 85 °C**
- **Easy to commission, “single pushbutton” operating philosophy**
- **Mechanical position indicator**
- **ATEX, FM, CSA, GOST and IECEx approvals**
  - flameproof enclosure
  - intrinsically safe

FOUNDATION

Compact, well-proven, and flexible

ABB

Contents

1 Description ... 3
1.1 Pneumatics ... 3
1.2 Operation ... 3
1.3 Communication ... 3
1.4 Modular design ... 3
2 Mounting versions ... 5
2.1 To linear actuators in accordance with the standard ... 5
2.2 To rotary actuators in accordance with the standard ... 5
2.3 Integral mounting to control valves ... 5
2.4 Special actuator-specific mounting ... 5
3 Operation ... 7
3.1 General ... 7
3.2 Operator panel ... 8
4 Communication ... 9
4.1 General ... 9
4.2 Configuration ... 9
4.3 FOUNDATION Fieldbus H1 ... 9
4.4 Benefits of FF communication ... 9
4.5 FF communication for TZIDC-220 ... 9
5 Technical data ... 10
5.1 Communication ... 10
5.2 Designation ... 10
5.3 Output ... 10
5.4 Travel ... 10
5.5 Air supply ... 10
5.6 Transmission data and influences ... 10
5.7 Environmental capabilities ... 11
5.8 Housing ... 11
5.9 Explosion protection ... 11
5.10 Options ... 11
5.11 Accessories ... 12
6 Electrical connection ... 13
7 Dimensions ... 15
8 Ordering information ... 18
8.1 Additional ordering information ... 19
8.2 Order information, accessories 1a ... 19
8.3 Order information, accessories 1b ... 20
8.4 Order information, accessories 2 ... 21
8.5 Order information, accessories 3 ... 22

1 Description

The TZIDC-220 is an electronically configurable positioner with communication capabilities, mounting to pneumatic linear or rotary actuators. It features a small and compact design, a modular construction, and an excellent cost-performance ratio.

Fully automatic determination of the control parameters and adaptation to the final control element yield considerable time savings and an optimal control behavior.

1.1 Pneumatics

An I/P module with subsequent pneumatic amplifier is used to control the pneumatic actuator. The well-proven I/P module proportionally converts the permanent electrical positioning signal from the CPU into a pneumatic signal used to adjust a 3/3-way valve.

The air flow for pressurizing or depressurizing the actuator is continuously adjusted. As a result, excellent control is achieved. When reaching the set point, the 3/3-way valve is closed in center position to minimize the air consumption.

Four different pneumatics versions are available: for single-acting or double-acting actuators, each with “fail-safe” or “fail-freeze” function.

1.1.1 “Fail-safe” function

If the electrical power supply fails, the positioner output 1 is depressurized, and the pneumatic actuator’s return spring moves the valve to the defined safe position. In case of a double-acting actuator the second output 2 is additionally pressurized.

1.1.2 “Fail-freeze” function

If the electrical power supply should fail, the positioner output 1 (and 2, if applicable) is closed and the pneumatic actuator stops (“freezes”) the valve in the current position. If compressed air supply should fail, the positioner depressurizes the actuator.

1.2 Operation

The positioner has a built-in operating panel providing a 2-line LCD and 4 pushbuttons for optimal local configuration, commissioning and operational monitoring.

Alternatively, the appropriate configuration program and the available communication option can be used.

1.3 Communication

Communication with the TZIDC-220 positioner occurs via FOUNDATION Fieldbus.

1.4 Modular design

The TZIDC-220 basic model can be enhanced at any time by retrofitting optional equipment. Option modules for analog or digital position feedback or a shutdown-module can be installed. Additionally, a mechanical position indicator, proximity switches or 24 V microswitches are available for indicating the position independently of the mother board function.

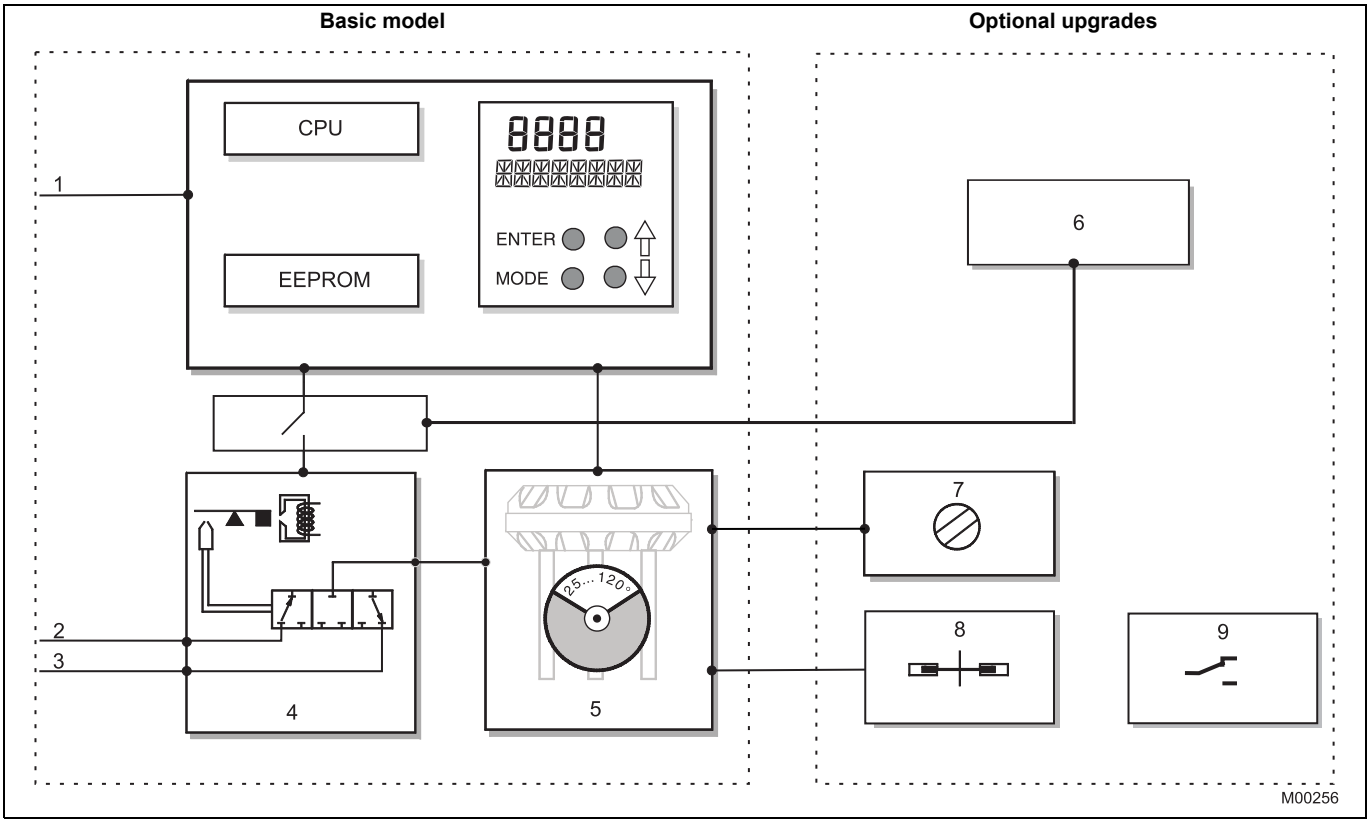

Fig. 1: TZIDC-220 schematic diagram

Basic model

1 Bus connector
2 Supply, 1.4 … 6 bar
3 Exhaust
4 I/P module with 3/3-way valve
5 Position sensor (optional up to 270° rotation angle)

Optional upgrades

6 Plug-in module for safety shutdown (forced depressurization)
7 Mechanical position indicator
8 Mechanical feedback with proximity switches
9 Mechanical feedback with microswitches 24 V

Note

With optional upgrades either the “mechanical feedback with proximity switches” (8) or the “mechanical feedback with microswitches 24 V” (9) can be used.

In both cases, the “mechanical position indicator” (7) must be installed.

2 Mounting versions

2.1 To linear actuators in accordance with the standard

Lateral attachment is in accordance with DIN / IEC 534 (lateral attachment to NAMUR). The required attachment kit is a complete set of attachment material, but does not include the screwed pipe connections and air pipes.

2.2 To rotary actuators in accordance with the standard

This attachment is designed for mounting according to the standard VDI/VDE 3845. The attachment kit consists of a console with mounting screws for mounting on a rotary actuator. The adapter for coupling the positioner feedback shaft to the actuator shaft has to be ordered separately. Screwed pipe connections and air pipes have to be provided on site.

2.3 Integral mounting to control valves

The TZIDC-220 positioner featuring standard pneumatic action is available as an option for integral mounting.

The required holes are found at the back of the device.

The benefit of this design is that the point for mechanical stroke measurement is protected and that the positioner and actuator are linked internally. No external tubing is required.

2.4 Special actuator-specific mounting

In addition to the mounting methods described above, there are special actuator-specific attachments.

Please contact us for details.

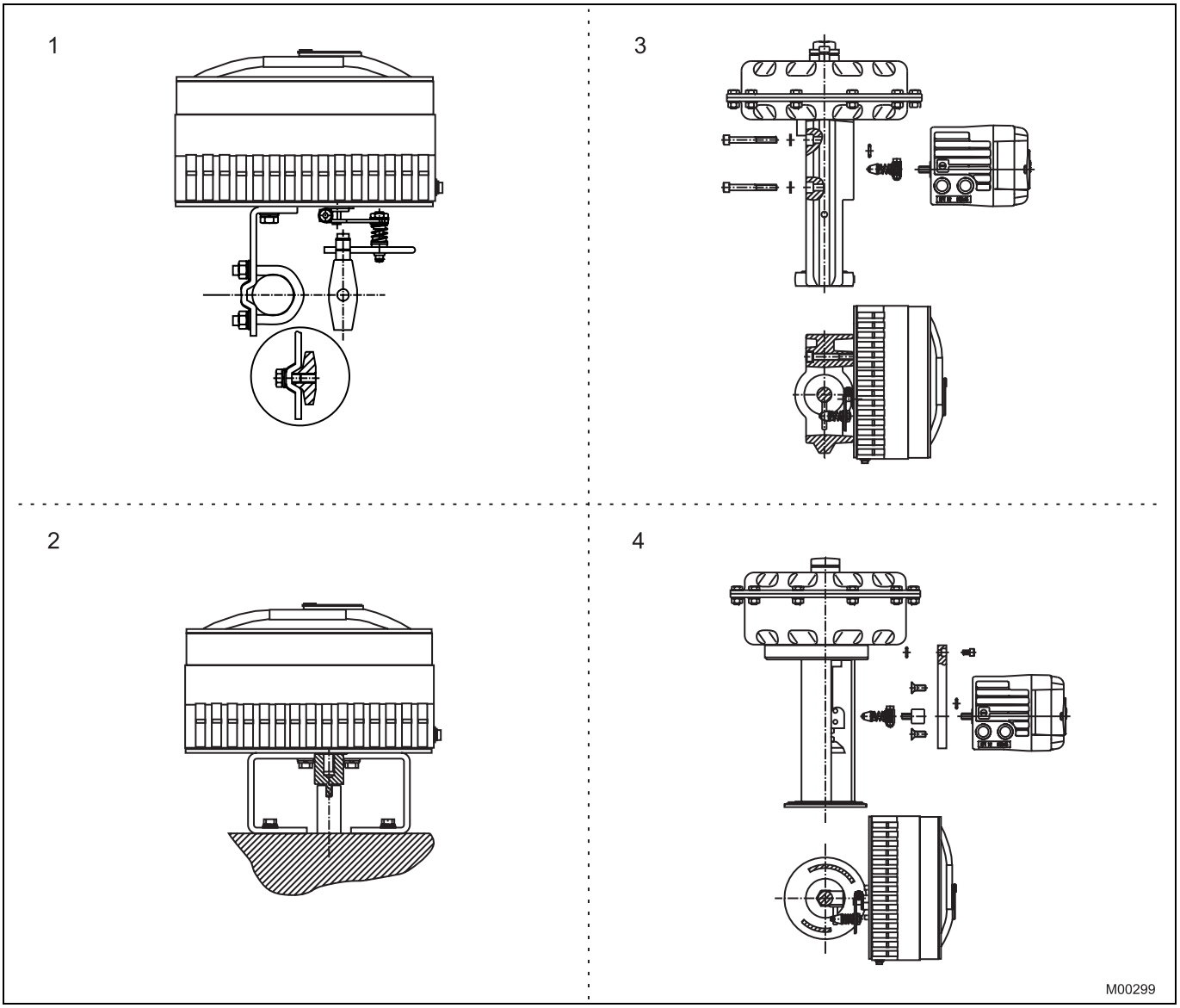

Fig. 2: Mounting options

1 Mounting to linear actuators acc. to DIN / IEC 534
2 Mounting to rotary actuators to VDI / VDE 3845
3 Integral mounting to control valves
4 Integral mounting to control valves by using an adapter panel

3 Operation

3.1 General

The intelligent, microprocessor-controlled TZIDC-220 positioner allows you to obtain optimal results. The positioner features high-precision control functions and high operational reliability. The optimal parameters are set automatically during autoadjust. If necessary, corrections can be made manually.

The total range of parameters includes:

- Operating parameters
- Adjustment parameters
- Monitoring parameters

3.1.1 Operating parameters

The following operating parameters can be activated and configured:

Characteristic curve (travel = f {signal})

Linear, equal percentage 1:25 or 1:50 or 25:1 or 50:1 or freely configurable with 20 reference points.

Tolerance band

When the tolerance band is reached, the position is considered as corrected. From this point on, the position is further slowly re-adjusted until the dead band is reached. The factory setting for this parameter is 0.3 %.

Dead band (sensitivity)

When reaching the dead band, the position is held. The factory setting for this parameter is 0,1 %. The tolerance band and dead zone are automatically calculated as part of the controller's self-optimization process.

Travel limit

The positioning travel, i.e. the stroke or angle of rotation, can be reduced as required within the full range of 0 ... 100 %, provided that a minimum value of 20 % is observed.

Shut-off function

This function can be selected separately for each end position. When the respective configured limit value is exceeded, the shut-off function causes the actuator to travel immediately to the selected end position.

Travel time prolongation

This function can be used to increase the max. travel time for full travel. This time parameter can be set separately for each direction.

Note
This function can only be used with the pneumatics with the safety function "fail-safe".

Rules in end position

For both end positions, you can select whether the pneumatic actuator is vented fully or whether the position is controlled.

3.1.2 Adjustment parameters

The TZIDC-220 positioner has a special function for automatic adjustment of the parameters. The function is launched either via the integrated operator's panel or the user interface.

The following adjustment parameters can be activated and configured:

Parameters for control block

To optimally adjust the actuator position, the control parameters can be set individually for the control behavior of the valve.

Range 0 ... 100 %

Configuration of end positions for the valve to be adjusted to start position "0" and end position "100 %".

Direction of the actuator

Calibration to both possible directions of action:

Air opens / spring force closes

or

Air closes / spring force opens

Display 0 … 100 %

Adjusting the display (0 ... 100 %) to the direction of action for opening or closing the valve.

3.1.3 Monitoring parameters

Various functions for permanent operational monitoring are implemented in the TZIDC-220 operating program, e.g.:

- Internal positioning time-out
- Sensor monitoring
- Backup monitoring

While automatic commissioning is in progress, the current state is continuously indicated on the integrated LCD. Remaining messages can be retrieved via the user interface.

The fieldbus enables users to implement enhanced monitoring in the control system. A special window displays the most important process variables ONLINE such as the positioning signal (in %), the position (in %), the control deviation (in %) as well as the status messages.

3.2 Operator panel

The TZIDC-220 positioner's operator panel with four pushbuttons allows for

- operational monitoring
- manual control
- configuration
- fully automatic commissioning

The operator panel is protected by a hinged cover which can be opened during operation even in hazardous areas, i.e. the positioner can be locally operated any time as required.

3.2.1 Single-button commissioning

Commissioning the TZIDC-220 positioner is especially easy. The standard Autoadjust function for automatic adaptation of the device parameters can be started by simply pressing a single front panel button, and without knowing parameterization details.

Depending on the selected actuator type (linear or rotary), the displayed zero position is automatically adapted:

- for linear actuators counter-clockwise (CTCLOCKW)
- for rotary actuators clockwise (CLOCKW).

Besides this standard function, a customized "Autoadjust" function is available. The function is launched either via the operator's panel or the configuration program.

3.2.2 Operation

The four buttons enable users to select operating levels, configure the device and store settings. In addition to the known operating functions, a simplified autoadjust can be performed. This enables you to launch the device's automatic configuration function in a few steps and without detailed knowledge regarding parameters.

When changing the actuator type from linear to rotary, the zero position of the display is automatically updated. This is indicated in the display for valves closing on the right in the closed position 0 %.

3.2.3 Display

The information indicated by the 2-line LCD is permanently updated and adapted during operation, to inform the operator in an optimal way.

During control operation the following TZIDC-220 data can be called up by pressing the pushbuttons briefly:

Up button	Cyclic communication: - Setpoint (%) - Setpoint status Acyclic communication: - Status of communication
Down button	Operating mode on the bus and bus address
Enter	Software Version

Fig. 3: TZIDC-220 with removed cover, view of the operator panel

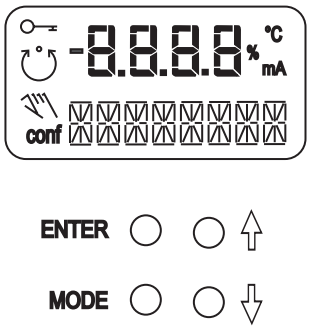

Fig. 4: TZIDC-220 operating elements and display

4 Communication

4.1 General

Communication occurs via the fieldbus connection. In conformance with bus convention, device data is read in cyclic operation (operating mode AUT, MAN or RCAS) and data is written in the O/S (out-of-service) mode. Newly set parameters are saved in the non-volatile memory directly after writing to the field device, and become active immediately.

FOUNDATION Fieldbus is an open bus standard that enables users to integrate devices from various manufacturers in a system and supports interoperability.

Communication occurs via an FF system using the fast, superordinate HSE bus (high-speed ethernet) and the slower but intrinsically safe H1 bus. It is layer-oriented and based on the ISO/OSI model (International Standards Organization's Open System Interconnect).

A device description (DD) provided in file format by the manufacturer contains all the necessary information on the FF device and its functions.

4.2 Configuration

The user interface for the TZIDC-220 positioner is integrated in the control system. This allows you to work with the fieldbus in the commissioning phase, during operation and for service tasks when monitoring the device, setting parameters and uploading data.

4.3 FOUNDATION Fieldbus H1

The FOUNDATION Fieldbus H1 was developed primarily for use in process automation. The transmission method (physical layer) complies with IEC 61158. The power supply for the field devices is provided concurrent with signal transmission via the fieldbus line. FOUNDATION Fieldbus H1 is also well suited for use in explosion-proof installations.

4.4 Benefits of FF communication

- Standardized function blocks and an interoperability test ensure smooth integration of devices from various manufacturers
- Acyclic access to device data (even during operation) for configuration, diagnostics and service
- High system uptimes based on comprehensive device and bus diagnostics as well as default value strategies in the event of an error
- Support for efficient facility management through provision of operating values

4.5 FF communication for TZIDC-220

Using the FOUNDATION Fieldbus in combination with a suitable configuration program installed in the control system, the TZIDC-220 can be easily monitored, configured and queried. Newly set parameters are saved in the non-volatile memory directly upon download to the device, and become active immediately.

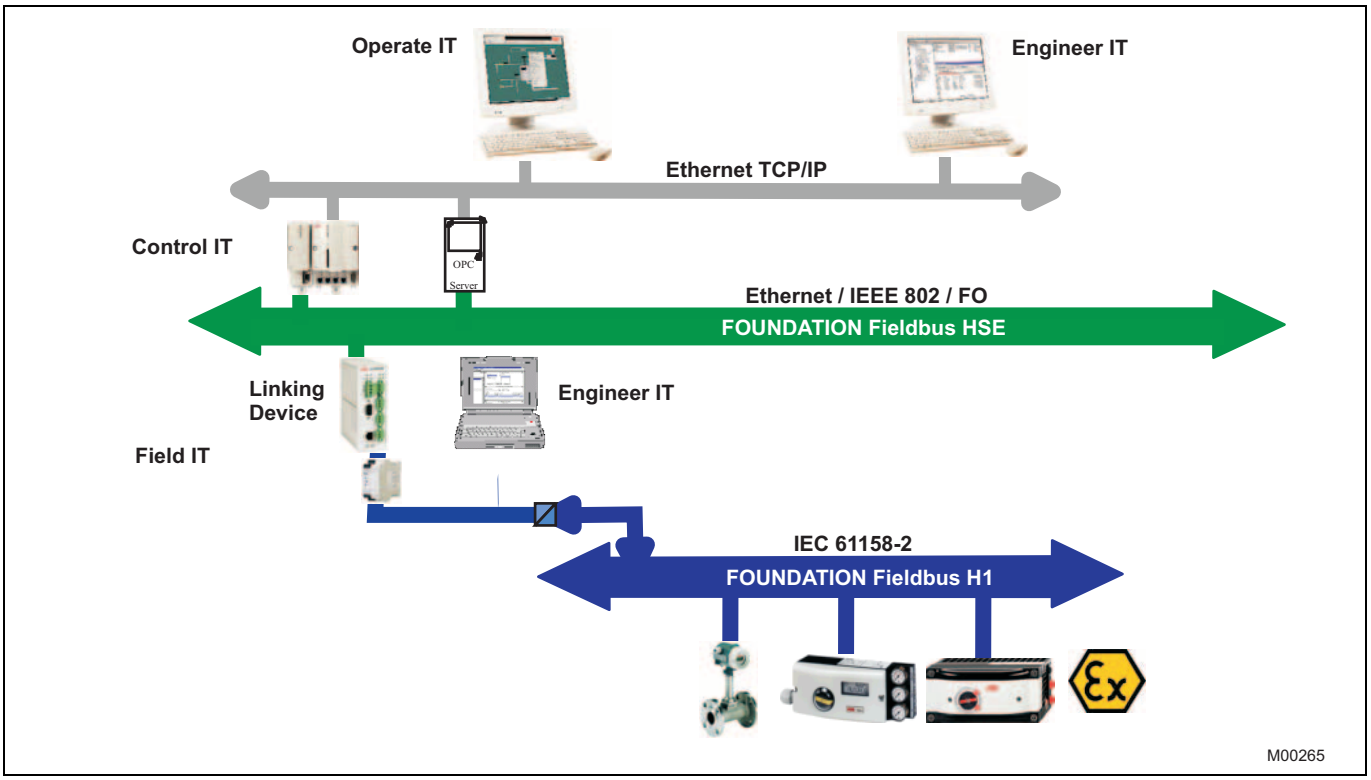

Fig. 5: Communication via FOUNDATION Fieldbus

5 Technical data

5.1 Communication

Specification	Foundation™ Fieldbus, version 1.5
Physical Layer	Model 113, 121 (IEC 61158-2)
Transmission rate	31.25 Kbit/s
Block types	1 AO Functional block 1 Transducer block 1 physical block
Max. execution time	AO block: 50 milliseconds
Supply voltage	Power feed from the fieldbus 9.0 ... 32.0 V DC
Max. permissible voltage	35 V DC
Power consumption	11.5 mA
Current in the event of an error	15 mA (11.5 mA + 3.5 mA)
Certificate	FF Conformance Test ITK4
Device name	ABB TZID-C120-TAG
Dev. ID	0003200028-TZID-C120XXXXXXXXXX
Unit address	Between 10 and 247, default address 23
ATEX certificate for FISCO	Yes
Insensitive to reversed polarity	Yes
Class	LM profile 32L, 31 PS
Factory default	The TZIDC-220 positioner is not delivered in an aligned state. To adjust the operating range and control parameters, an automatic configuration must be run on the unit. Otherwise, the transducer block remains in out-of-service mode.
Diagnostic functions	Self-diagnostics for the TZIDC-220 hardware and software, valve diagnostics with enhanced alarm handling

5.2 Designation

Device name	ABB TZID-C120XXXXXXXXXX
Dev. ID	0X3200028-TZID-C120XXXXXXXXXX

5.3 Output

Range	0 …6 bar (0 … 90 psi)
Air capacity	
at 1.4 bar (20 psi) supply pressure	5.0 kg/h = 3.9 Nm^3/h=2.3 scfm
at 6 bar (90 psi) supply pressure	13 kg/h = 10 Nm^3/h = 6.0 scfm
Output function	For single or double-acting actuators, air is vented from actuator or actuator is blocked in case of (electrical) power failure
Shut-off values	End Position 0 % = 0 ... 45 % end position 100 % = 55 … 100 %

5.4 Travel

Rotation angle	
Used range	
25 … 120°	(rotary actuators, optionally 270°)
25 … 60°	(linear actuators)
Travel time prolongation	
Setting range	0 ... 200 seconds, separately for each direction

5.5 Air supply

Instrument air	free of oil, water and dust acc. to DIN / ISO 8573-1 pollution and oil content according to Class 3 (purity: max. particle size: 5 µm, max. particle density: 5 mg / m^3; oil content: max. concentration: 1 mg / m^3; pressure dew point: 10 K below operating temperature
Supply pressure	1.4 ... 6 bar (20 ... 90 psi) Note: Do not exceed the max. operating pressure of the actuator!
Air consumption	< 0.1 kg/h / 0.05 scfm (independent of supply pressure)

5.6 Transmission data and influences

Direction of action (output signal or pressure in actuator)

Increasing	Increasing output signal 0 ... 100 % Increasing pressure y1 in the actuator
Decreasing	Increasing output signal 0 ... 100 % Decreasing pressure y1 in the actuator

Characteristic deviation	< 0.5 %
Tolerance band	0.3 ... 10 %, adjustable
Dead band	0.1 ... 5 %, adjustable
Resolution (A/D conversion)	> 16000 steps
Sample rate	20 ms
Influence of ambient temperature	< 0.5 % for each 10 K
Influence of vibration	≤ ± 1 % to 10 g and 80 Hz

Seismic requirements

Meets requirements of DIN / IEC 68-3-3 Class III for strong and strongest earthquakes.

Influence of mounting orientation

Not measurable.

Meets the requirements of the following directives

- EMC Directive 89 / 336 / EWG as of May 1989
- EC Directive for CE conformity marking

5.7 Environmental capabilities

Ambient temperature

For operation, storage and transport:	-40 … 85 °C
When using proximity switches SJ2-S1N (NO):	-25 … 85 °C

Relative humidity

Operational (with closed housing and air supply switched on):	95 % (annual average), condensation permissible
Transport and storage:	75 % (annual average), non-condensing

5.8 Housing

Material/Protections
Aluminum, protection class IP 65 / NEMA 4X

Surface/color
Electrostatic dipping varnish with epoxy resin, stove-hardened. Case varnished black, RAL 9005, matte, housing cover Pantone 420.

Electrical connections
Screw terminals: Max. 1.0 mm² for options,
Max. 2.5 mm² for bus connection.
Note: Do not expose the terminals to strain.
Cable entry: 2 tap holes 1/2-14 NPT or
M20 x `1.5 (cable gland or pipe plug must be ordered separately)

Pneumatic connections
Threads G 1/4 or 1/4-18 NPT

Weight
3,0 kg

Mounting orientation
any orientation allowed

Dimensions
see dimensional drawings

5.9 Explosion protection

Note
The values indicated here are taken from the respective approval certificates.
Always observe the specifications and supplements in the certificates.
(see operating instructions).

FM Approval HLC 7/04 3019164
Explosion proof; enclosure 4X; T5, max. 82 °C
CL I; Div 1; Grp. C-D

Dust ignition-proof; enclosure 4X; T5; max. 82 °C
CL II, III, Div 1 Grp. E-F-G

CSA Certification 1555690
Explosion proof; enclosure 4X
Temperature range: -40 … 85 °C
T5, max. 85 °C ; T6, max. 70 °C
CL I; Div 1; Grp. C-D
CL II; Div 1; Grp. E-F-G
CL III

ATEX / GOST Ukraine	**II 2G EEx d II C T4/T5/T6**
Prototype test certificate:	DMT 02 ATEX E 029 X
Type:	Flameproof enclosure for equipment
Device class:	II 2G (EEx ib IIC)
Temperature class:	T4, T5, T6
Permissible ambient temperature:	T4: -40 °C < T_{amb} < 85 °C
	T5: -40 °C < T_{amb} < 80 °C
	T6: -40 °C < T_{amb} < 65 °C

ATEX	**II 2G EEx ia IIC T6**
Prototype test certificate:	TÜV 02 ATEX 1831 X
Type:	Intrinsically safe equipment
Device class:	II 2G (EEx ia IIC)
Temperature class:	T4, T5, T6
Permissible ambient temperature:	T4: -40 °C < T_{amb} < 85 °C
	T5: -40 °C < T_{amb} < 55 °C
	T6: -40 °C < T_{amb} < 40 °C

IECEx	**Ex ia IIC T6**
Prototype test certificate:	IECEx TUN 04.0015X, Issue no.: 0
Type:	Intrinsically safe
Temperature class:	T4, T5, T6
Permissible ambient temperature:	T4: -40 °C < T_{amb} < 85 °C
	T5: -40 °C < T_{amb} < 55 °C
	T6: -40 °C < T_{amb} < 40 °C

Signal circuit for FOUNDATION fieldbus only for connecting a certified intrinsically safe circuit (e.g., FISCO power supply or barriers) with max. values acc. to:

	FISCO power supply ia/ib for Grp. IIB/IIC	**FISCO power supply ia/ib for Grp. IIB/IIC**	**Barriers or power supply ia/ib for Grp. IIB/IIC**
Voltage	Ui = 17.5 V	Ui = 17.5 V	Ui = 24 V
Current	Ii = 380 mA	Ii = 360 mA	Ii = 250 mA
Power	Pi = 5.32 W	Pi = 2,52 W	Pi = 1,2 W
Characteristic	rectangular	trapezoidal	linear

5.10 Options

Module for the emergency shutdown function

Supply voltage	24 V DC (20 ... 30 V DC) (galvanically isolated from input signal)
Safe position is activated when	voltage < 5 V
Explosion protection	EEx ia IIC

Without the separate 24 V DC feed, the positioner moves into safe position independent of the processor by depressurizing the actuator. In addition, the feed for the I/P module is isolated via an optocoupler. Communication and feedback remain active because the TZIDC-220 is fed via a bus line. The shutdown switching input is galvanically isolated from the positioning signal.

The emergency shutdown function can save use of additional solenoid valves and has a safety certificate from TÜV Rheinland acc. to AK4. The plug-in module also has an Ex certificate for use in intrinsically safe circuits.

Mechanical position indicator

- Indicator disk
- Cover with transparent dome
- Symbol label
- Extension shaft

Digital position feedback with proximity switches

Two proximity switches for independent position signaling. Switching points adjustable between 0 … 100 %

Current circuits acc. to DIN 19234 / NAMUR

Supply voltage	5 ... 11 V DC
Signal current < 1.0 mA	Switching state logical “0“
Signal current > 2,0 mA	Switching state logical “1“

(function dependent on software and electronics for actuator)

Direction of action (logical state)

	Position			
Proximity switch	< Lim. 1	> Lim. 1	< Lim. 2	> Lim. 2
SJ2-SN (NC)	0	1	1	0
SJ2-S1N (NO)	1	0	0	1

Digital position feedback with 24 V microswitches*

Two microswitches for independent position signaling. Switching points adjustable between 0 ... 100 %.

Voltage	max. 24 V AC / DC
Load rating	max. 2 A
Contact surface	10 µm Gold (AU)

Mechanical position indicator

Indicator disk in enclosure cover, linked with positioner feedback shaft through magnetic coupling.

*The “digital feedback” is activated directly from the axis of rotation for the variable pick-off and can only be used with the “mechanical position indicator”.

Note
These options are also available for retrofitting by Service.

5.11 Accessories

Mounting material

Attachment kit for linear actuators to DIN/IEC 534 / NAMUR

Attachment kit for rotary actuators to VDI/VDE 3845

Attachment kit for integral mounting to control valves

Attachment kit for actuator-specific attachment upon request

Pressure gauge block

With pressure gauges for supply and output pressure. Pressure gauges with housing ø 28 mm, with connection block in aluminum, black with installation material for mounting to TZIDC-220.

Filter regulator

All metal version in brass, varnished black, bronze filter element, 40 µm, with condensate drain.

max. pre-pressure 16 bar, output adjustable to 1.4 ... 6 bar

6 Electrical connection

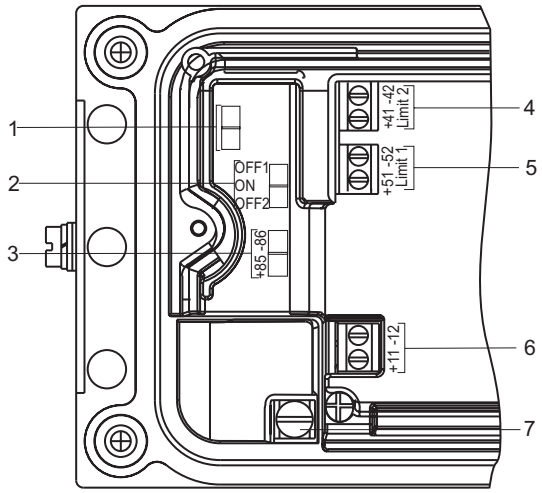

Fig. 6: Screw terminals, overview

1 Not assigned
2 Service switch for emergency shutdown module
3 Terminals of the shutdown module
4 Digital position feedback, either proximity switches or 24 V microswitches
5 Same as 4
6 Bus connector
7 Grounding screw

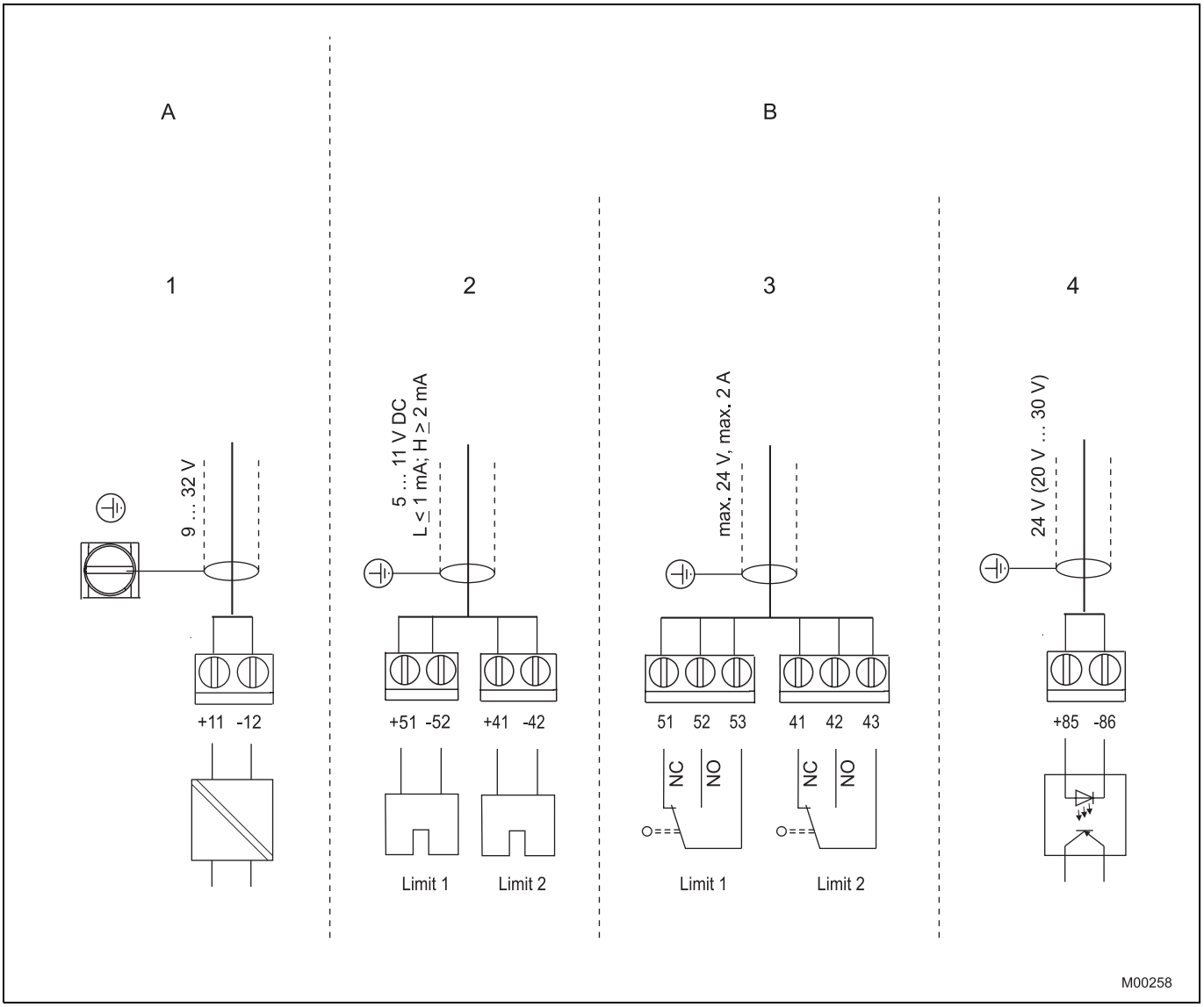

Fig. 7: Pin configuration

A Basic model
B Options

1 Fieldbus, bus feed
2 Proximity switches
3 Microswitches
4 Emergency shutdown module

Note
Keep cable shields as short as possible and connect on both sides.

7 Dimensions

All dimensions in mm (inch)

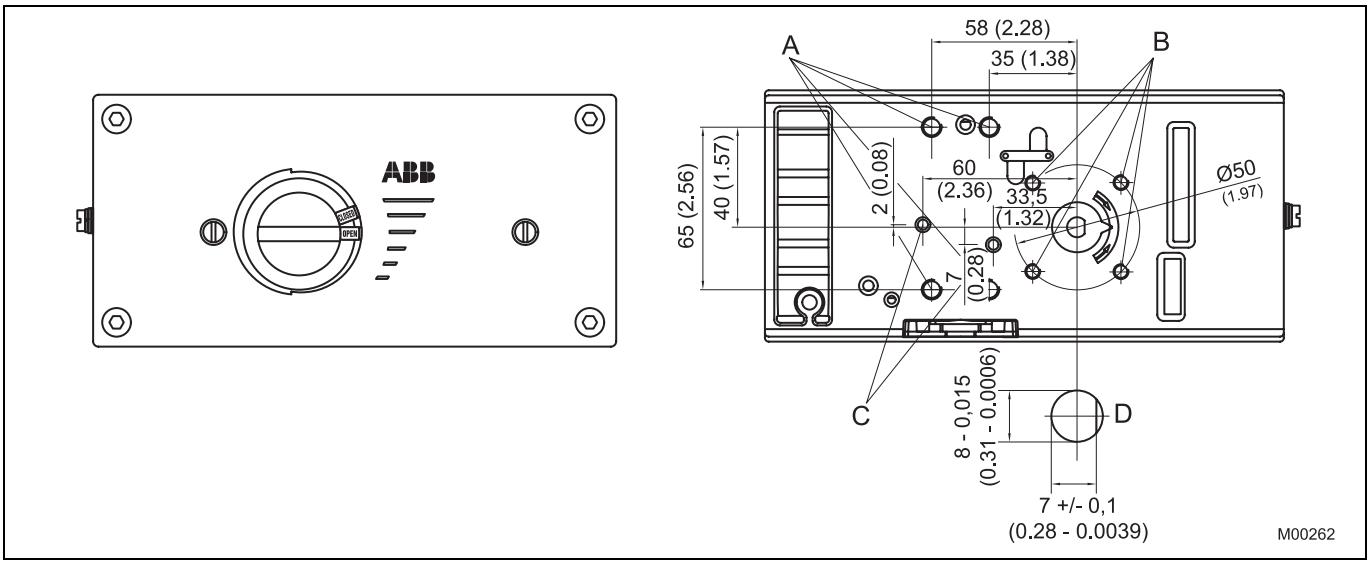

Fig. 8: Top view

A Tap hole M8 (10 mm low)
B Tap hole M6 (8 mm low)
C Tap hole M5 x 0.5 (air connections in version for integral mounting)
D Sensor shaft (larger than scale)

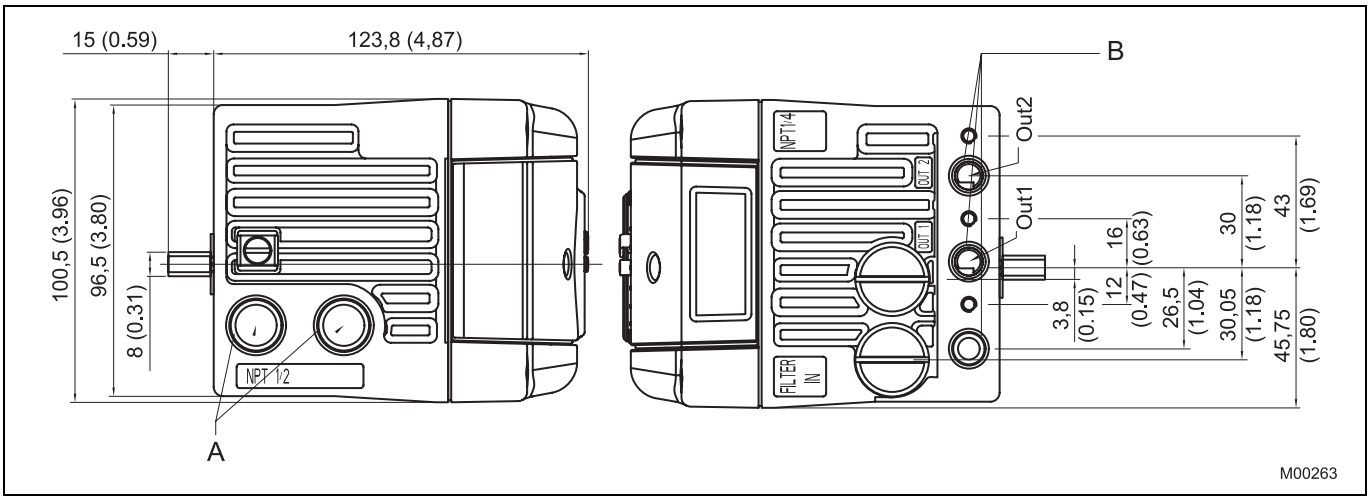

Fig. 9: Left and right side view

A NPT ½” or M20 x 1.5
B Pneumatic connections, NPT ¼“ -18 or G1/4“

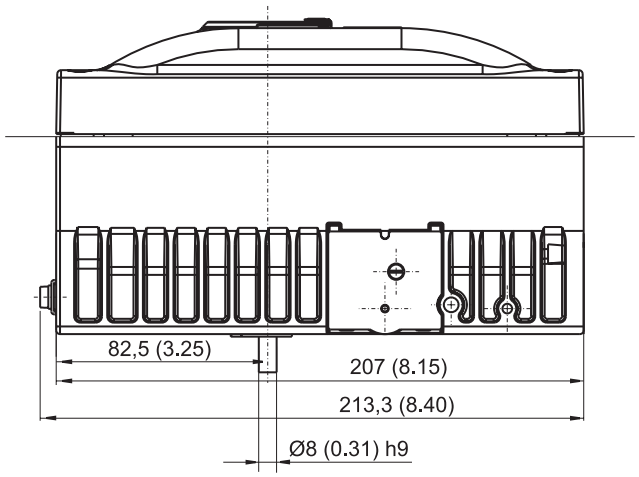

Fig. 10: Bottom view

A Pneumatic connections, NPT 1/4"-18 or G1/4"

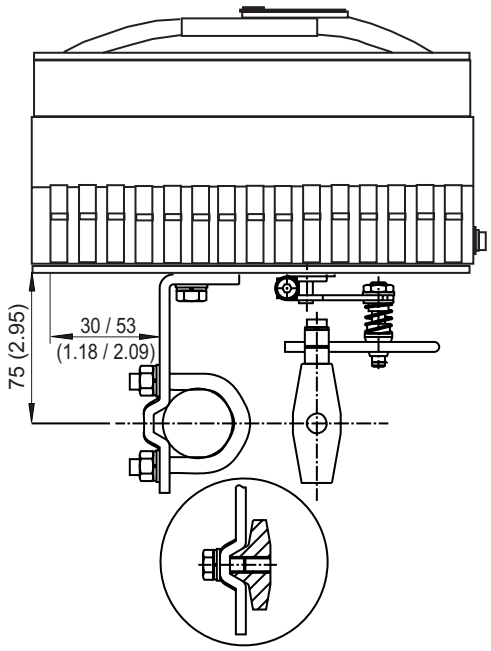

Mounting to linear actuators to DIN/IEC 534

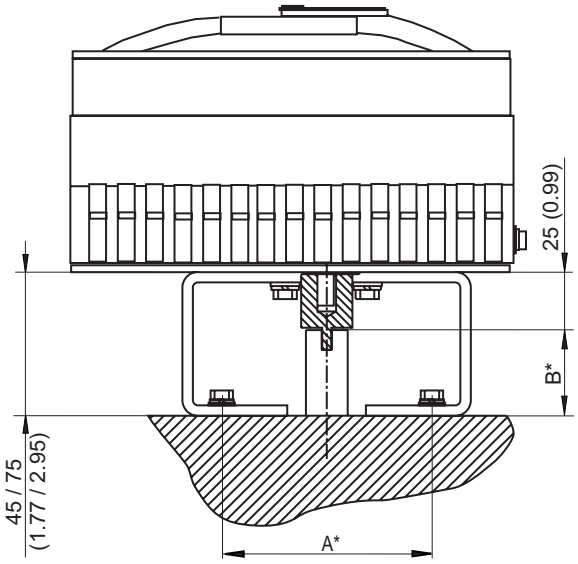

Mounting to rotary actuators to VDI/VDE 3845
*) Dimensions A and B are dependent on the rotary actuator

Fig. 11: Mounting drawings

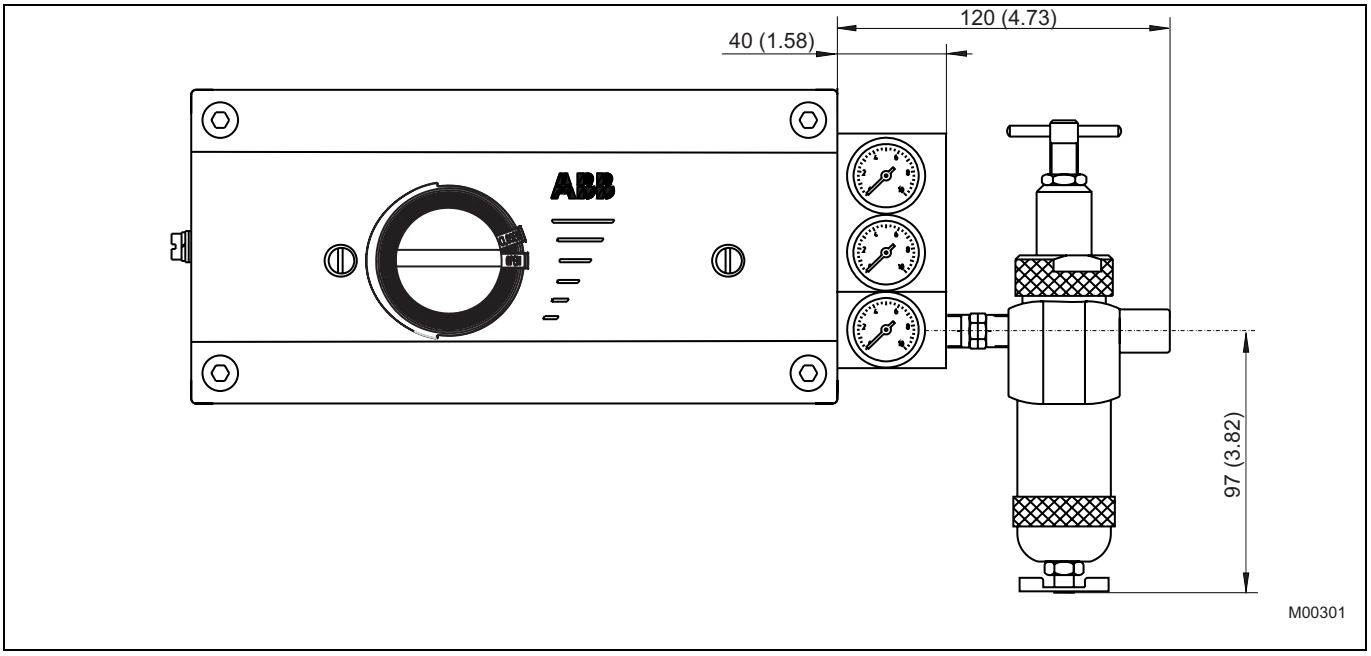

Fig. 12: Positioner TZIDC-220 with pressure gauge block and filter regulator

8 Ordering information

Electro-Pneumatic Positioner Variant digit No.	1 - 7	8	9	10	11	12	13	14	15	16	17	18	Code			
TZIDC-220 with Flameproof Enclosure Catalog No.	**V18350-**		**0**							**4**						
for FOUNDATION Fieldbus, intelligent, software-configurable																
Case / Mounting																
Case made of aluminium, varnished, protection IP 65 (NEMA 4X)																
for mounting to linear actuators acc. to DIN/IEC 534 / NAMUR																
or to rotary actuators acc. to VDI/VDE 3845		1														
as above, but with mechanical position indicator		2														
for integral mounting to control valves		3														
as above, but with mechanical position indicator		4														
for mounting to rotary actuators acc. to VDI/VDE 3845																
with extended rotation angle up to 270°		5														
as above, but with mechanical position indicator		6														
See Options/Accessories for customer-specific mounting																
Please specify the actuator tye and type of mounting																
Note:																
Special mounting material is required																
(see "Accessories")																
Operation																
with operator panel and display integrated in the enclosure cover				1												
Explosion protection																
ATEX Ex II 2 G EEx d IIC T4, T5, T6					1											
FM/CSA Class 1, Div. 1, Group C-D (explosion-proof)			1)		2											
ATEX EEx ia IIC T6 and EEx d IIC T4, T5 ,T6					3											
IECEx Ex ia IIG T6					5											
Other explosion protection certificate upon request																
Output / safe position (in case of an electrical power failure)																
Single acting, fail safe						1										
fail freeze						2										
Double acting, fail safe						3										
fail freeze						4										
Connections					2)											
Cable: Thread M20 x 1.5 Air pipe: Thread G 1/4							1									
Cable: Thread M20 x 1.5 Air pipe: Thread 1/4-18 NPT							2									
Cable: Thread 1/2-14 NPT Air pipe: Thread 1/4-18 NPT							3									
Option module for shutdown function																
without								0								
Plug-in module for shutdown function						3)		5								
Optional mechanical kit for digital position feedback																
without									0							
Mechanical kit for digital position feedback																
with proximity switches SJ2-SN (NC or logical 1)									1							
with proximity switches SJ2-S1N (NO or logical 0)							4)		2							
with 24 V DC/AC microswitches (change-over contacts)							5)		3							
Design (varnish / coding)																
Standard											1					
As specified (on request)											2					
Device identification label (provide list, if available)																
without												0				
label including text (plain text, max. 16 letters)																
with separate sticker												1				
with separate stainless steel label 18.5 x 65 mm												2				

1) only with cable connection NPT thread
2) EEx d cable glands see accessories
3) only for fail safe pneumatic
4) only for ambient temperature range -25...+85 °C
5) only for Ex d version

Continued on next page

8.1 Additional ordering information

TZIDC-220		Code			
Certificates					
Certificate of compliance	with the order acc. to EN 10204-2.1 (DIN 50049-2.1)	CF1			
Certificate of compliance	with the order acc. to EN 10204-2.1 (DIN 50049-2.1) with item description	CF2			
Test Report acc. to EN 10204-2.2 (DIN 50049-2.2)		CF3			
Inspection certificate	3.1 acc. to EN 10204 with max. deviation	CBA			

8.2 Order information, accessories 1a

		Catalog No.	Code			
Mounting material and cost						
Attachment kit for linear actuators						
(lateral attachment to DIN/IEC 534 / NAMUR)	stroke 10 ... 35 mm	7959125				
	stroke 20 ... 100 mm	7959126				
Attachment kit for rotary actuators (mounting to VDI/VDE 3845)						
consisting of:						
a) Adapter (shaft coupler)		7959110				
b) Mounting bracket	dimension A/B = 80/20 mm	319603				
	dimension A/B = 80/30 mm	319604				
	dimension A/B = 130/30 mm	319605				
	dimension A/B = 130/50 mm	319606				

8.3 Order information, accessories 1b

TZIDC-220			Catalog No.	Code			
Pressure gauge block	including attachment material						
for single acting TZIDC-220	with 2 pressure gauges Ø 28 mm						
(1 x for air supply and 1 x for output pressure)							
G 1/4 connections	Supply pressure range						
	0...10 bar/ 0...140 psi						
	Output pressure range	0...4 bar/ 0...60 psi	7959111				
		0...10 bar/ 0...140 psi	7959112				
1/4-18 NPT connections	Supply pressure range						
	0...10 bar/ 0...140 psi						
	Output pressure range	0...4 bar/ 0...60 psi	7959113				
		0...10 bar/ 0...140 psi	7959114				
for double acting TZIDC-220	with 3 pressure gauges Ø 28 mm						
(1 x for air supply and 2 x for output pressure)							
G 1/4 connections	Supply pressure range						
	0...10 bar/ 0...140 psi						
	Output pressure range	0...4 bar/ 0...60 psi	7959115				
		0...10 bar/ 0...140 psi	7959116				
1/4-18 NPT connections	Supply pressure range						
	0...10 bar/ 0...140 psi						
	Output pressure range	0...4 bar/ 0...60 psi	7959117				
		0...10 bar/ 0...140 psi	7959118				
(Pressure gauge blocks are delivered as separate units for mounting by the customer)							
Filter regulator, brass	incl. material for mounting to pressure gauge block						
connections	thread G 1/4		7959119				
	thread 1/4-18 NPT		7959120				
(Filter regulators are delivered as separate units for mounting by the customer)							
EEx d cable glands		6)					
1 x EEx d cable gland M20 x 1.5, 1 pipe plug M20 x 1.5, securing adhesive			7959244				
2 x EEx d cable glands M20 x 1.5, securing adhesive			7959245				
1 x EEx d cable gland 1/2" NPT, 1 pipe plug 1/2" NPT, securing adhesive			7959246				
2 x EEx d cable glands 1/2" NPT, securing adhesive			7959247				

6) for cable diameter 7.2...11.7 mm

8.4 Order information, accessories 2

TZIDC , TZIDC-110, TZIDC-120, TZIDC-200, TZIDC-210, TZIDC-220			Catalog No.			
Attachment kit for	**Manufacturer / Type**					
Air Torque	SC 30	9)	319604			
Air Torque	SC-P-60-4	9)	319604			
Air Torque	SR 30	9)	319603			
ARI	DP32, DP33, DP34		7959125			
AMG	SAD 010 ... SAF 040	9)	319603			
AMG	SAD 040 ... SAF 050	9)	319605			
ARCA	812 stroke 30 mm		7959107			
ARCA	812 stroke 60 mm		7959106			
ARCA	813 stroke 30 mm		7959109			
ARCA	813 stroke 60 mm		7959108			
Automax	DA 85 ... DA150	9)	319603			
Badger Meter	ATC 754/755		7959123			
bar	GTE / GTD 045 ... 127	9)	319604			
bar	GTE / GTD 143 ... 254	9)	319605			
Bray	92 / 93 series	9)	319603			
Conovalve	Series 740.000 / 750.000 / 770.000 / 795.000		7959125			
El-O-Matic	ED / ED / PE / PD 500 ... 4004	9)	319605			
El-O-Matic	ED / ED / PE / PD 25 ... 350	9)	319603			
FESTO	DRD-4-F05 ... DRD-50F10	9)	319603			
FESTO	DRD-77-F10 ... DRD-255-F14	9)	319605			
Fisher	1051-30, 1052-30		7959214			
Fisher	1061 size 130		7959206			
Fisher	471		7959195			
Fisher	585 C		7959250			
Fisher	657 / 667 Size 10 ... 30 mm		7959177			
Flow Serve	DA 85 ... 150	9)	319603			
Foxboro	FoxPak IP127 / V725		7959168			
Foxboro	V713 stroke 10 ... 35 mm		7959125			
Foxboro	V713 stroke 25 ... 90 mm		7959126			
GEFA	AC 020 ... AC 1750	9)	319604			
GEFA	MC 063 FA	9)	319603			
GEMÜ	690/25 and 50		7959103			
GEMÜ	CleanStar		7959125			
Gulde	DK		7959161			

9) need additional Adapter (Shaft Coupler), Catalog No. 7959110

8.5 Order information, accessories 3

TZIDC , TZIDC-110, TZIDC-120, TZIDC-200, TZIDC-210, TZIDC-220			Catalog No.			
Attachment kit for	**Manufacturer / Type**					
Honeywell	600-11, 600-15		7959126			
Hytork	XL26 ... XL680	9)	319603			
Hytork	XL1125, XL1370, XL2585, XL4580	9)	319605			
Keystone	79U/E-002(S) ... 79U/E-181(S)		7959147			
Mapag	A/F 30 ... A/F 500	9)	319603			
Masoneilan	CAMFLEX II, VARIMAX, MINITORK II		7959144			
Masoneilan	VariPak 28000 series		7959163			
MaxFlo	MaxFlo		7959140			
NAF	791290		7959207			
NAMUR	stroke 10 ... 35 mm		7959125			
NAMUR	stroke 25 ... 90 mm		7959126			
NAMUR	stroke 100 ... 170 mm		7959339			
NELES	B1JU8, B1J8U, B1CU9/20E, B1CU17/55, B1CU13-32, B1C6U-20U, 1JAU10/20, BC6U-20U	9)	319603			
NELES	BC6-20, B1C6-20, BJ8-20, B1J8-20		7959146			
Norbro	10AR40, 20BR40, 20AR40, 20RDA40, 15AR40, 15BR40	9)	319603			
Norbro	25AR40, 25BR40, 35AR40, 35BR40, 33-40, 30AR40	9)	319604			
Norbro	45BR40, 45AR40	9)	319606			
Prisma	PP10, PP20	9)	319604			
Prisma	PPW	9)	319603			
Remote Control	RCD 05-DA/SR ... RCD 60-DA/SR	9)	319603			
Revo	FD/FS 12, 25, 50	9)	319603			
Revo	FD/FS 90, 130, 180, 205, 306	9)	319605			
Richter	RA-1/2 046 ... RA-1/2 127	9)	319604			
Richter	RA-1/2 185 ... RA-1/2 300	9)	319605			
Samson	241, 271, 3271		7959145			
Samson	3277		7959136			
Schubert&Salzer	GS 8020 / 8021 / 8023		7959200			
SED	SED stroke 100 mm		7959141			
VDI / VDE 3845	80 / 20 mm	9)	319603			
VDI / VDE 3845	80 / 30 mm	9)	319604			
VDI / VDE 3845	130 / 30 mm	9)	319605			
VDI / VDE 3845	130 / 50 mm	9)	319606			

9) need additional Adapter (Shaft Coupler), Catalog No. 7959110

ABB has Sales & Customer Support expertise in over 100 countries worldwide.

www.abb.com/instrumentation

The Company's policy is one of continuous product improvement and the right is reserved to modify the information contained herein without notice.

Printed in the Fed. Rep. of Germany (07.2007)

© ABB 2007

3KXE341006R1001

10/18-0.34-EN Rev. B

ABB Limited
Salterbeck Trading Estate
Workington, Cumbria
CA14 5DS
UK
Tel: +44 (0)1946 830 611
Fax: +44 (0)1946 832 661

ABB Inc.
125 E. County Line Road
Warminster, PA 18974
USA
Tel: +1 215 674 6000
Fax: +1 215 674 7183

ABB Automation Products GmbH
Schillerstr. 72
32425 Minden
Germany
Tel: +49 551 905-534
Fax: +49 551 905-555
CCC-support.deapr@de.abb.com